DPA UPSCALE™ RI 10 - 80 kW
Technical Specifications

Power and productivity
for a better world™

TABLE OF CONTENTS

10.1 DPA UPScale RI SYSTEM DESCRIPTION

In environments that demand zero downtime, continuous power protection availability is essential. In order to respond to today's dynamic IT and process-related environments that experience daily change through new server technologies, migration and centralization, resilient and easily adaptable power protection concepts are required.
DPA UPScale is the foundation for continuous power protection availability of network-critical infrastructures in enterprise data centers where business continuity has paramount importance and in process control environment where manufacturing continuity is essential.

DPA UPScale's is a third generation high-power-density (HPD), leading-edge double-conversion power protection technology that has standardized on a modular component approach which helps speed deployment, improve adaptability and increase system availability while reducing total cost of ownership.

DPA UPScale's is a unique on-demand architecture that integrates the power rack, power distribution unit, back-up battery rack and monitoring and management solutions to allow easy selection of optimized configurations.

DPA UPScale's (Distributed Parallel Architecture) provides highest availability, unmatched flexibility and at the same time lowest cost of ownership in IT environments.

This Technical Specification provides detailed technical information on the mechanical, electrical and environmental performance of the DPA UPScale model types that can support to give answers to tender and end-user requirements. The DPA UPScale family was designed to respond to the most stringent safety, EMC and other important UPS standards. DPA UPScale family is offered in two types of solutions:

DPA UPScale RI is a rack independent modular design offering 7-types of Rack Independent Subracks. Those can accommodate DPA UPScale Rack based Modules for a wide range of power requirements:

DPA UPScale RI (rack independent) Subracks:

- DPA UPScale RI 10 (20kW)
- DPA UPScale RI 11 (20kW)
- DPA UPScale RI 12 (20kW)
- DPA UPScale RI 20 (40kW)
- DPA UPScale RI 22 (40kW)
- DPA UPScale RI 24 (40kW)
- DPA UPScale RI 40 (80kW)

DPA UPScale Modules types:
UPScale M 10 (10kW)
UPScale M 20 (20kW)

Key Features of DPA UPScale RI:

- Highest Availability
  Modular, Decentralized Parallel Architecture (DPA)
  Near-zero down time
- High Power Density (up to 122kW / m^2),
  Small Footprint
  Space-saving of expensive floor space
- Unity Output Power Factor
  Full power for loads with unity PF
  No de-rating for loads with Unity PF
- Highest Efficiency even with partial loads
  Efficiency = 94.5 - 95.5% for loads 25-100%
  (depending on Module power and type of load)
  Energy cost saving during UPS-life-cycle
- Very low input current distortion THDi
  THDi =< 3.0 @ 100 % load
  Gen-set power and installation cost saving

10.2 TECHNICAL CHARACTERISTICS DPA UPScale RI

10.2.1 MECHANICAL CHARACTERISTICS DPA UPScale RI (Rack Independent) Subracks

DPA UPScale RI	unit	UPScale RI 10	UPScale RI 11	UPScale RI 12
DPA UPScale RI Subrack		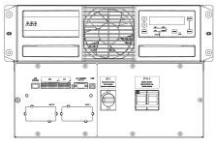	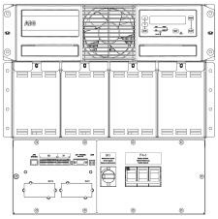	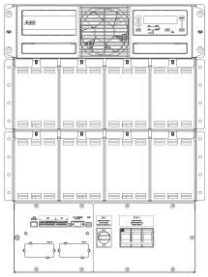
Configuration accommodates:	Max.	1 module (10 or 20kW)	1 module (10 or 20kW) with 40 x 7/9Ah batteries	1 module (10 or 20kW) With 80 x 7/9Ah batteries
Max. Subrack connection	kW	20	20	20
Dimensions (WxHxD)	mm	448x310x565 (7 HU) 482[1)]x310x565 (7 HU)	448x487x735 (11 HU) 482[1)]x487x735 (11 HU)	448x665x735 (15 HU) 482[1)]x665x735 (15 HU)
Weight of Empty Frame w/o modules and w/o batteries	kg	20	40	56
Weight of Frame with modules and w/o batteries	kg	39 up to 42 (with 1 Module)	59 up to 62 (with 1 Module)	75 up to 78 (with 1 Module)

DPA UPScale RI	unit	UPScale RI 20	UPScale RI 22	UPScale RI 24
DPA UPScale RI Subrack		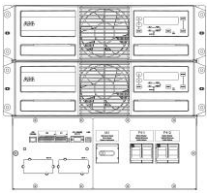	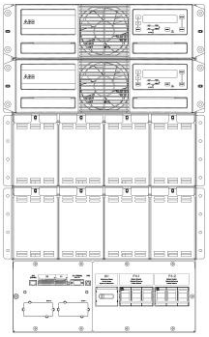	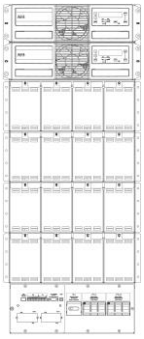
Configuration accommodates:	Max.	2 modules (10 or 20kW)	2 modules (10 or 20kW) with 80 x 7/9Ah batteries	2 modules (10 or 20kW) with 160 x 7/9Ah batteries
Max. Subrack connection	kW	40	40	40
Dimensions (WxHxD)	mm	448x440x565 (10 HU) 482[1)]x440x565(10 HU)	448x798x735 (18 HU) 482[1)]x798x735(18 HU)	448x1153x735 (26 HU) 482[1)]x1153x735(26 HU)
Weight of Empty Frame w/o modules and w/o batteries	kg	25	66	93
Weight of Frame with modules and w/o batteries	kg	62 up to 68 (with 2 Modules)	103 up to 104 (with 2 Modules)	130 up to 136 (with 2 Modules)

Note : [1)] 482 mm is the width including the wings in the front.

DPA UPScale RI	unit	UPScale RI 40
DPA UPScale RI Subrack		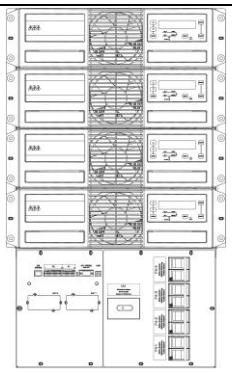
Configuration accommodates:	Max.	4 modules (10 or 20kW)
Max. Subrack connection	kW	80
Dimensions (WxHxD)	mm	448x798x735 (18 HU) 482[1)]x798x735 (18 HU)
Weight of Empty Frame w/o modules and w/o batteries	kg	50
Weight of Frame with modules and w/o batteries	kg	124 up to 136 (with 4 Modules)

Module type	unit	UPScale M 10	UPScale M 20
Module rated power	kW	10	20
Allowed nr. VRLA 12V battery blocks	No.	20[2)] - 50	30[2)] - 50
Dimensions (WxHxD)	mm	482[1)] x 132 x 540 (3HU)	
Weight	kg	18.6	21.5
Colors		Front : RAL 9005	
Approximate[3)] audible noise at 1m from front, of one module only. 100% / 50% Load	dBA	55[3)] / 49[3)]	57[3)] / 49[3)]

Notes:

[1)] 482 mm is the width including the wings in the front.
[2)] Depending of the effective load in kW used by the module (see chapter 10.4 Battery Characteristics)
[3)] These are approx. figures and of one module only. The audible noise depends also on the cabinet which host the subracks.

10.3 INPUT CHARACTERISTICS

Module type	unit	UPScale M 10	UPScale M 20
Module rated power	kW	10	20
Nominal Input Voltage	V	3x380/220V+N, 3x400V/230V+N, 3x415/240V+N	
Input Voltage Tolerance (ref to 3x400/230V) for Loads in %:	V	(-20%/+15%) 3x308/184 V to 3x460/264 V for <100 % load (-26%/+15%) 3x280/170 V to 3x460/264 V for < 80 % load (-35%/+15%) 3x240/150 V to 3x460/264 V for < 60 % load	
Input Frequency	Hz	35 – 70	
Input Power Factor	-	0.99 @ 100 % load	
Inrush Current	A	max. In	
Total harmonic distortion (THDi)	%	< 4.5	< 3.0
Max. input power with rated output power (cosphi = 1.0), rated input voltage and charged battery **per Module**	kW	10.5	21
Max. Input Current with rated output power (cosphi = 1.0), rated input voltage and charged battery **per Module**	A	15.2	30.4
Max. Input Power with rated output power (cosphi = 1.0), rated input voltage and discharged battery **per Module**	kW	11.5	23
Max. Input Current with rated output power (cosphi = 1.0), rated input voltage and discharged battery **per Module**	A	16.6	33.3

10.4 BATTERY CHARACTERISTICS

Module type	unit	UPScale M 10	UPScale M 20
Battery Type	-	Maintenance free VRLA or NiCd	
Allowed nr. VRLA 12V battery blocks	-	30[2)] - 50	40[2)] - 50
Allowed nr. of 1.2V NiCd cells	-	300[2)] - 500	400[2)] - 500
Maximum charging current per module	A	4 (6 on request)	
Battery Charging Curve	-	Ripple free ; IU (DIN 41773)	
Temperature compensation	-	Standard (temp. sensor optional)	
Battery Test	-	Automatic and periodically (adjustable)	

[2)] Depending of the effective autonomy (see table here below)

Module type	M10	M20
5 min autonomy: min. number of 12V batt. blocks	30	40
any autonomy: min. number of 12V batt. blocks	34	48

10.5 OUTPUT CHARACTERISTICS

Module type	unit	UPScale M 10	UPScale M 20
Output rated apparent power (cosphi 0.8)	kVA	10	20
Output rated active power (cosphi 1.0)	KW	10	20
Output nominal current (In) at 230VAC ph-N and cosphi 1.0	A	14.5	29
Output Rated Voltage	V	3x380/220V or 3x400/230V or 3x415/240V	
Output Voltage Stability	%	Static: < +/- 1% Dynamic (Step load 0%-100% or 100%-0%) < +/- 4%	
Output Voltage Distortion	%	With Linear Load < 1.5% With Non-linear Load (EN62040-3:2001) < 3%	
Output Frequency	Hz	50 Hz or 60 Hz	
Output Frequency Tolerance	%	Synchronized with mains < +/- 2 % (selectable for bypass operation) or < +/- 4 % Free running +/- 0.1 %	
Efficiency AC-AC (at cosphi 1.0) (tolerance +/- 0.5% applies on all figures)	%	Load : 100% 75% 50% 25% M20&M10: 95.5 95.5 95 94.5	
Bypass operation		At Nominal Input voltage of 3x400 V +/- 15% or 190 V to 264 V ph-N	
Permissible Unbalanced Load (All 3 phases regulated independently)	%	100%	
Phase Angle Tolerance (With 100 % Unbalanced load)	°	< 2	
Overload Capability on Inverter	%	125 % load 10 min. 150 % load 60 sec.	
Output short capability on inverter (RMS)	A	3.0xIn during 40 ms	2.25xIn during 40 ms
Output short capability on static bypass (RMS)	A	10xIn during 20 ms	
Static bypass transfer time: inverter → bypass / bypass → inverter / in eco-mode	ms	<1 / <5 / <6	
Crest Factor (Load supported)		3:1	

10.5.1 GRAPH: AC – AC EFFICIENCY with Linier load @ cosphi 1

Efficiency up to 1 % higher with output PF cosphi 0.8
Details refer to paragraph 10.7 Environmental Characteristics

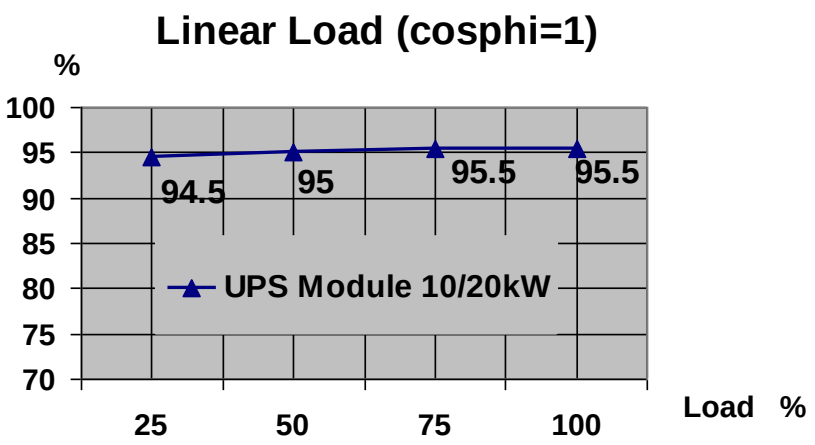

10.5.2 GRAPH: Output Power in KW and KVA VERSUS cosphi

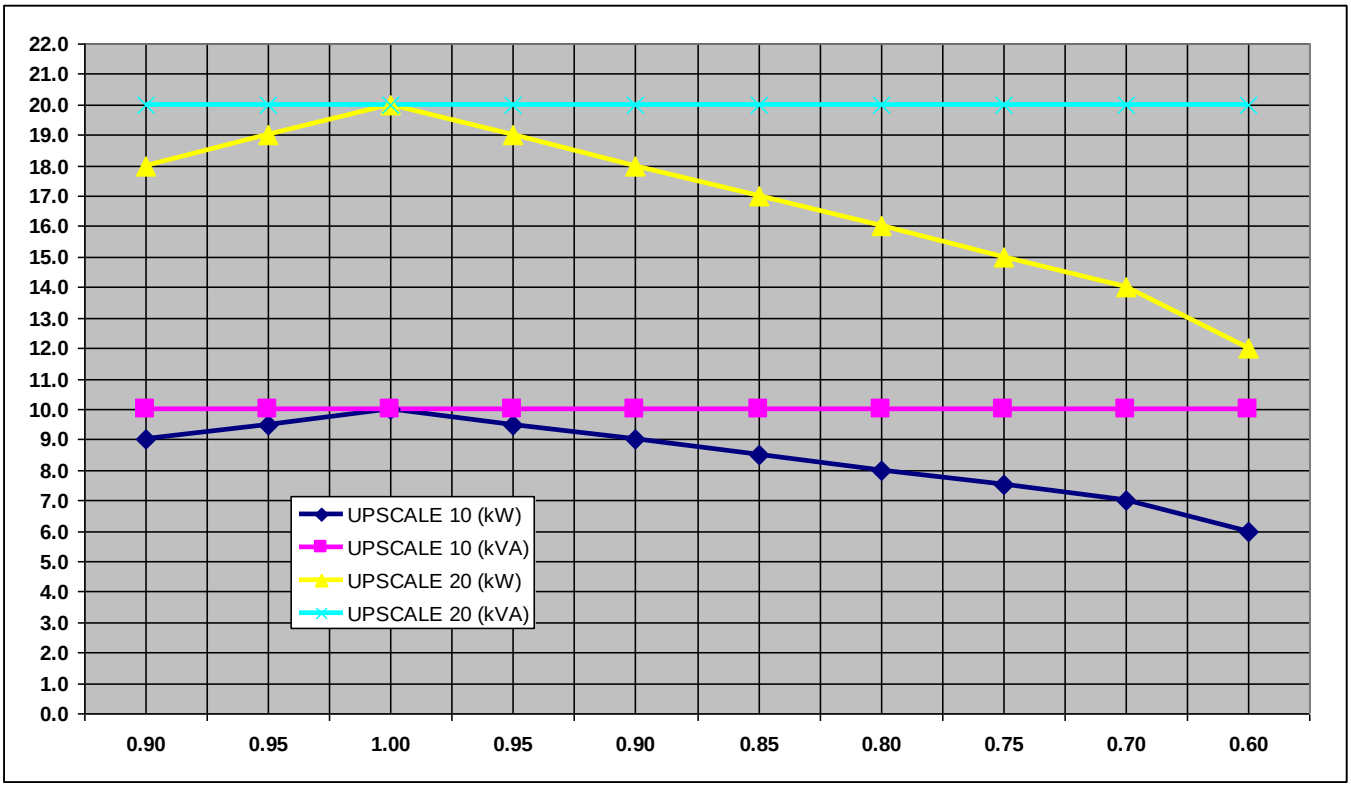

		UPScale Module M 10		UPScale Module M 20	
cosφ		kW ◇	kVA □	kW △	kVA X
	0.9	9	10	18	20
	0.95	9.5	10	19	20
unity	**1**	**10**	**10**	**20**	**20**
Ind.	0.95	10	10	19	20
	0.9	9	10	18	20
	0.85	8.5	10	17	20
	0.8	8	10	16	20
	0.75	7.5	10	15	20
	0.7	7	10	14	20
	0.6	6	10	12	20

Changes of this table without notice – modifications reserved

10.6 ENVIRONMENTAL CHARACTERISTICS

Module type	**unit**	**UPScale M 10**	**UPScale M 20**
Module rated power	kW	10	20
Operation temperature	°C	0 - 40	
Ambient Temperature for Batteries (recommended)	°C	20 - 25	
Storage Temperature	°C	-25 - +70	
Battery Storage Time at Ambient Temperature		Max. 6 months	
Max. altitude (above sea level) without de-rating	m/feet	1000 / 3300ft	
De-rating factor for use at altitudes above 1000m sea level according (IEC 62040-3)	m/feet	(meter / feet) above sea level	De-Rating Factor for Power
		1500 / 4850	0.95
		2000 / 6600	0.91
		2500 / 8250	0.86
		3000 / 9900	0.82
Relative Air-humidity		Max. 95% (non-condensing)	
UPS Positioning		See chapter 10.11	
Input and Output Power Cabling		From the bottom on the front	
Efficiency AC-AC up to (at cosphi 1.0) (tolerance +/- 0.5% applies on all figures)	%	*Load* : *100 %* *75 %* *50%* *25%* M20&M10: 95.5% 95.5% 95% 94.5%	
Efficiency with Linear Load at cosphi =0.8 ind Efficiency Non-linear Load (IEC/EN 6240-3)		Typically up to 1 % higher of above values Typically up to 1 % lower of above values	
Eco-Mode efficiency at 100% load	%	98 %	

10.7 STANDARDS

Safety	EN 62040-1-1, EN 60950-1
Electromagnetic Compatibility	EN 61000-6-4 Prod.standard: EN 62040-2 EN 61000-6-2 Prod.standard: EN 62040-2 EN 61000-4-2, EN 61000-4-3 - EN 61000-4-4 - EN 61000-4-5 - EN 61000-4-6
EMC Classification, Emission Class	C3
Immunity Class	C3
Performance	IEC/EN 62040-3
Product certification	CE
Degree of protection	IP 20

10.8 COMMUNICATION

Power Management Display (PMD)	1 LCD display for each module
RJ45 Plug (Not used)	RJ45 Plug (for future options)
Customer Interfaces : Outputs DRY PORT X 2	5 voltage free contacts For remote signaling and automatic computer shutdown
Customer Interfaces : Inputs DRY PORT X1	1 x Remote Shut down [EMERGENCY OFF (Normally closed)] 2 x Programmable Customer's Inputs (1st default as GEN-ON (Normally open) (2nd free Programmable Customer's Inputs (Normally open) 1 x Temp. Sensor for Battery Control 1 x 12 Vdc output (max. 200mA)
Serial ports RS232 on Sub-D9	1 x system frame For monitoring and integration in network management
USB	1x For monitoring and software management
Slot for SNMP	SNMP card (optional) For monitoring and integration in network management

10.8.1 POWER MANAGEMENT DISPLAY (PMD)

The user-friendly PMD consists of three parts the MIMIC DIAGRAM, CONTROL KEYS and LCD that provides the necessary monitoring information about the UPS.

10.8.2 MIMIC DIAGRAM

The mimic diagram serves to give the general status of the UPS. The LED-indicators show the power flow status and in the event of mains failure or load transfer from inverter to bypass and vice-versa the corresponding LED-indicators will change color from green (normal) to red (warning). The LED's LINE 1 (rectifier) and LINE 2 (bypass) indicate the availability of the mains power supply. The LED's INVERTER and BYPASS if green indicate which of the two are supplying power to the critical load. When the LED-indicator BATTERY is lit it means that the battery due to mains failure is supplying the load. The LED-indicator ALARM is a visual indication of any internal or external alarm condition. At the same time the audible alarm will be activated.

10.8.3 DISPLAY

The 2 x 20 character LCD simplifies the communication with the UPS. The menu driven LCD enables the access to the EVENT REGISTER, or to monitor the input and output U, I, f, P, Autonomy Time and other Measurement's, to perform commands like start-up and shut-down of INVERTER or load transfer from INVERTER to BYPASS and vice-versa and finally it serves for the DIAGNOSIS (SERVICE MODE) for adjustments and testing (for more details see the USER MANUAL of DPA UPScale™).

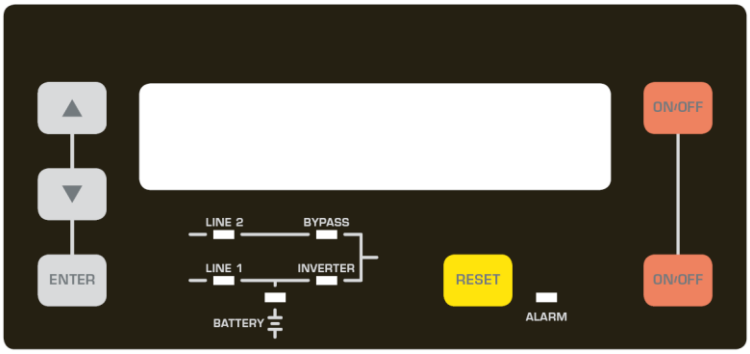

Power Management Display (PMD)
of DPA UPScale™

10.8.4 CUSTOMER INTERFACES Terminals X1…X2

10.8.5 CUSTOMER INPUTS DRY PORTs: Terminal block X2

Connection of Remote Shut down facilities, Generator Operation, Customers specials
(see UM Section 9 / OPTIONS)

10.8.6 CUSTOMER OUTPUTS DRY PORTs : Terminal blocks X1

Provision of signals for the automatic and orderly shutdown of servers, AS400 or Automation building systems

All voltage free contacts are rated 60 VAC max. and 500 mA max.:
All the interfaces are connected to Phoenix Spring terminals with wires : 0.5 mm2

Block	Terminal	Contact	Signal	On Display	Function
X2	X2 / 1	NO	ALARM	MAINS_OK	Mains Present
	X2 / 2	NC			**Mains Failure**
	X2 / 3	C			Common
	X2 / 4	NO	Message	LOAD_ON_INV	**Load on Inverter**
	X2 / 5	NC			(Load on Mains bypass)
	X2 / 6	C			Common
	X2 / 7	NO	ALARM	BATT_LOW	**Battery Low**
	X2 / 8	NC			Battery OK
	X2 / 9	C			Common
	X2 / 10	NO	Message	LOAD_ON_MAINS	**Load on bypass** (Mains)
	X2 / 11	NC			(Load on Inverter)
	X2 / 12	C			Common
	X2 / 13	NO	ALARM	COMMON_ALARM	**Common Alarm** (System)
	X2 / 14	NC			NO Alarm Condition
	X2 / 15	C			Common
X1	X1 / 1	IN	+ 12Vdc		**Generator Operation**
	X1 / 2	GND	GND		(NC = Generator ON)
	X1 / 3	IN	+ 12Vdc		**Customer IN 1**
	X1 / 4	GND	GND		(Function on request, to be defined)
	X1 / 5	IN	+ 3.3Vdc		**Temperature Battery**
	X1 / 6	GND	GND		(If connected , the battery charger current if depending of the battery temp.)
	X1 / 7	IN	+ 12Vdc		**Remote Shut down**
	X1 / 8	GND	GND		(Do not remove the factory mounted bridge until external Remote Shut down is connected)
	X1 / 9	IN	+ 12Vdc		**12 Vdc sourse**
	X1 / 10	GND	GND		(max. 200 mA load)

Phoenix Spring Terminals (X1…X2) Connection

10.9 OPTIONS

- SNMP card and WaveMon Management Software , Modbus Protocol
- External Battery Cabinets
- In/Output Transformator for special voltages on request
- Temp. sensor for battery temp. control

10.9.1 SNMP card / WaveMon Management Software

The Simple Network Management Protocol (SNMP) is a worldwide-standardized communication-protocol. It is used to monitor any device in the network via simple control language. The UPS-Management Software WaveMon also provides its data in this SNMP format with its internal software agent. The operating system you are using must support the SNMP protocol. We offer our WaveMon software with SNMP functionality for Novell, OS/2, all Windows running on INTEL and ALPHA, DEC VMS, Apple.
Two types of SNMP interfaces with identical functionality are available: an external SNMP-Adapter (Box) and an internal SNMP-Card. Both can manage a parallel system (N modules) and return either global values - which are consistent for the whole parallel system - or specific values from the single modules.

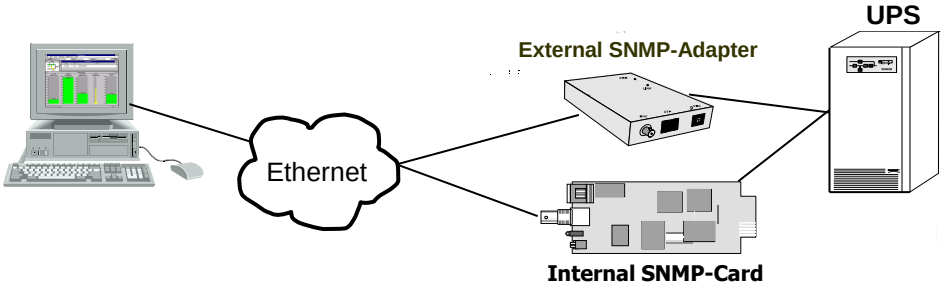

10.10 BATTERY AUTONOMIES

10.10.1 Examples of Internal Battery Autonomy of DPA UPScale RI 11, RI 12, RI 22 , RI 24

Module Type		*UPScale M 10*		*UPScale M 20* Module need at least 48 blocks for full power or minimum 40 blocks for 16kW		
Internal Separate Battery configuration		**Battery Autonomy in (min.) per Module**				
Frame Type	**Separate Battery / Module**	**8kW**	**10kW**	**12kW**	**16kW**	**20KW**
UPScale RI 11 max. 40 blocks **1 modules ONLY**	(1x40)x7Ah / Module	8	6	5		
UPScale RI 22 max. 80 blocks **1 modules ONLY**	(1x50)x7Ah / Module	11	8.	7	4	
UPScale RI 22 max. 80 blocks **up to 2 modules**	(1x40)x7Ah / Module	8	6	5		

Internal Common Battery configuration		**Battery Autonomy in (min.) for Tot. System Power**				
With 1 Module	***Module Type***	***1 x UPScale M 10***		***1 x UPScale M 20***		
	Total System Power	**8kW**	**10kW**	**12kW**	**16kW**	**20KW**
UPScale RI 22	1x (2x40)x7Ah	21	15	12	8	5
With 2 Modules	***Module Type***	***2 x UPScale M 10***		***2 x UPScale M 20***		
	Total System Power	**16kW**	**20kW**	**24kW**	**32KW**	**40kW**
UPScale RI 22	1x (2x40)x7Ah	8	6	5		
UPScale RI 24	2x (2x40)x7Ah	21	16	13	9	5

10.11 INSTALLATION PLANNING

DPA UPScale RI is a rack independent design which is always mounted into a rack. The hosting rack must have front and back opening for that air flow. The cold or ambient temp. air inlet is on the front; the hot air outlet is on the back. Back clearance of min. 20 cm is required for hot air outlet.

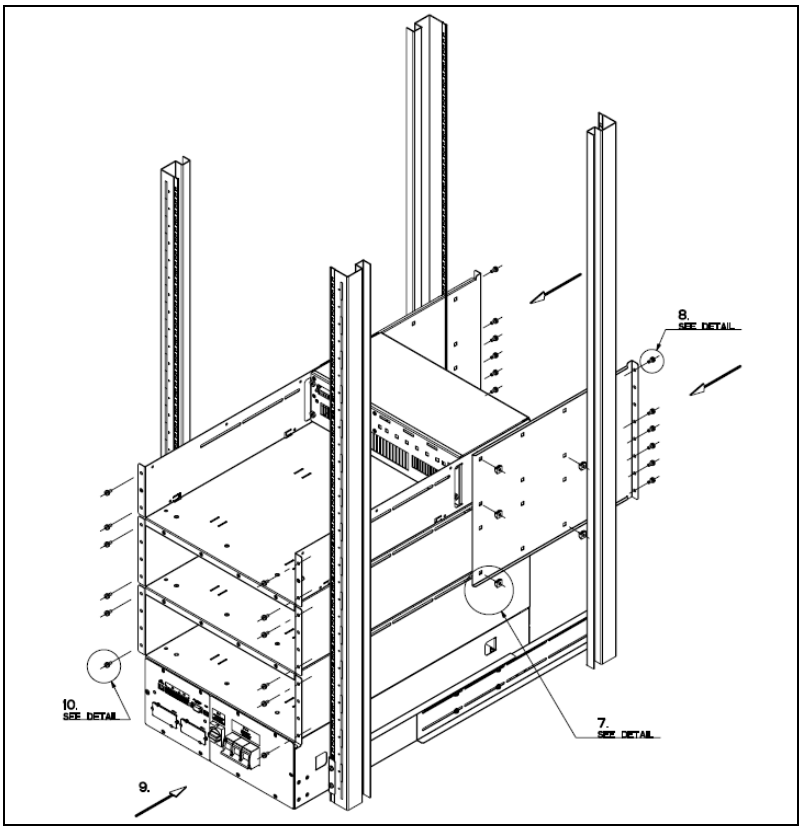

Figure 1: a typical installation scheme of an RI subrack.

Subrack type	RI 10	RI 11	RI 12	RI 20	RI 22	RI 24	RI 40
Accessibility	Totally front accessibility for service and maintenance						
Clearances	Back clearance of min. 20 cm required for hot air outlet. Cold air inlet is from front.						
Positioning and mounting	see operating manual, Section 1 for details and mounting instructions.						
Input and Output Cabling	From the bottom on the rear side.						

10.11.1 HEAT DISSIPATION PER MODULE WITH NON-LINEAR LOAD

Module Type	unit	UPScale M 10	UPScale M 20
Heat Dissipation with 100% NNL[4)] per Module	W	550	1100
Heat Dissipation with 100% NNL[4)] Load per Module	BTU/h	1887	3754
Airflow (25° - 30°C) with NNL[4)] Load per Module	m^3/h	150	150
Dissipation at no load	W	120	150

[4)] NLL means Non-Linear Load according to IEC/EN 62040-3.

10.12 WIRING AND BLOCK DIAGRAMS FOR ALL FRAMES AND MODULES

The customer has to supply the wiring to connect the UPS to the local power source. The installation inspection and initial start up of the UPS and extra battery cabinet must be carried out by a qualified service personnel such as a licensed service engineer from the manufacturer or from an agent certified by the manufacturer. More details and procedure are mentioned in the user manual.

10.12.1 TERMINAL CONNECTIONS OVERVIEW

FRAME TYPE Terminals (T) Connection Bar (B)	**Battery Earth PE**	**Separate. Battery** (+ / N / -)	**Common Battery** (+ / N / -)	**Input Bypass** 3+N	**Input Rectifier** 3+N+PE	**Output load** 3+N+PE
UPScale RI 10	16/25mm^2 (T)	3 x 10/16mm^2 (T)	n.a	4 x 10/16 mm^2 (T)	5 x 10/16 mm^2 (T)	5 x 10/16 mm^2 (T)
UPScale RI 11	n.a.	n.a.	n.a.			
UPScale RI 12	n.a.	n.a.	n.a.			
UPScale RI20	16/25mm^2 (T)	2x (3 x 10/16mm^2) (T)	3 x M5 (B)	4 x 16/25 mm^2 (T)	5 x 16/25 mm^2 (T)	5 x 16/25 mm^2 (T)
UPScale RI 22	n.a.	n.a.	n.a.			
UPScale RI 24	n.a.	n.a.	n.a.			
UPScale RI40	50 mm^2 (T)	4x (3 x 10/16mm^2) (T)	3 x M6 (B)	3 x 50 mm^2 (T) + N 70/95 mm^2 (T)	3 x 50 mm^2 (T) + N 70/95 mm^2 (T) +PE 50 mm^2 (T)	3 x 50 mm^2 (T) + N 70/95 mm^2 (T) +PE 50 mm^2 (T)

n.a. = not allowed

UPScale RI 11, RI 12, RI 22, RI 24 (on rear site)

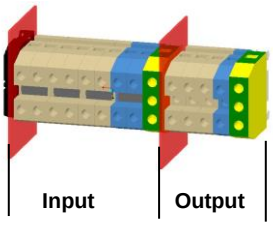

UPScale RI 10 (on rear site)

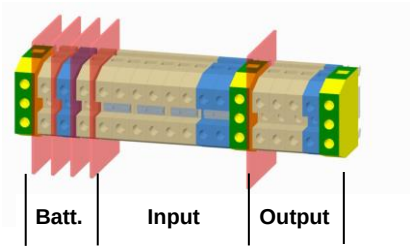

UPScale RI 20 (on rear site)

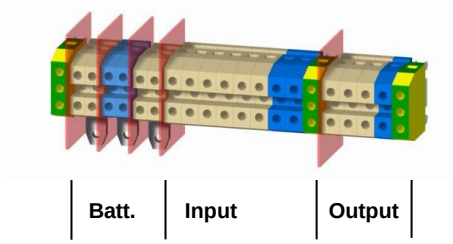

UPScale RI 40 (on rear site)

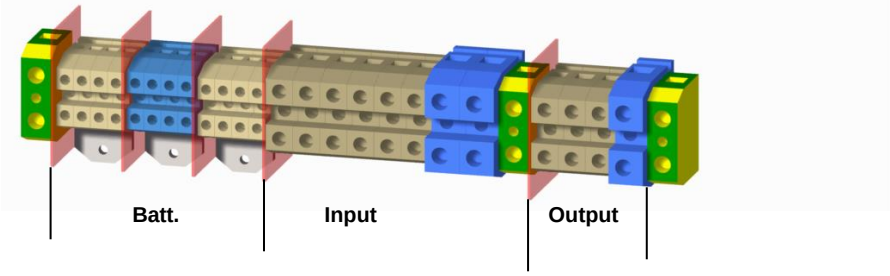

10.12.2 SINGLE FEED INPUT

Cable Sections and Fuse Ratings recommended. Alternatively, local standards to be respected

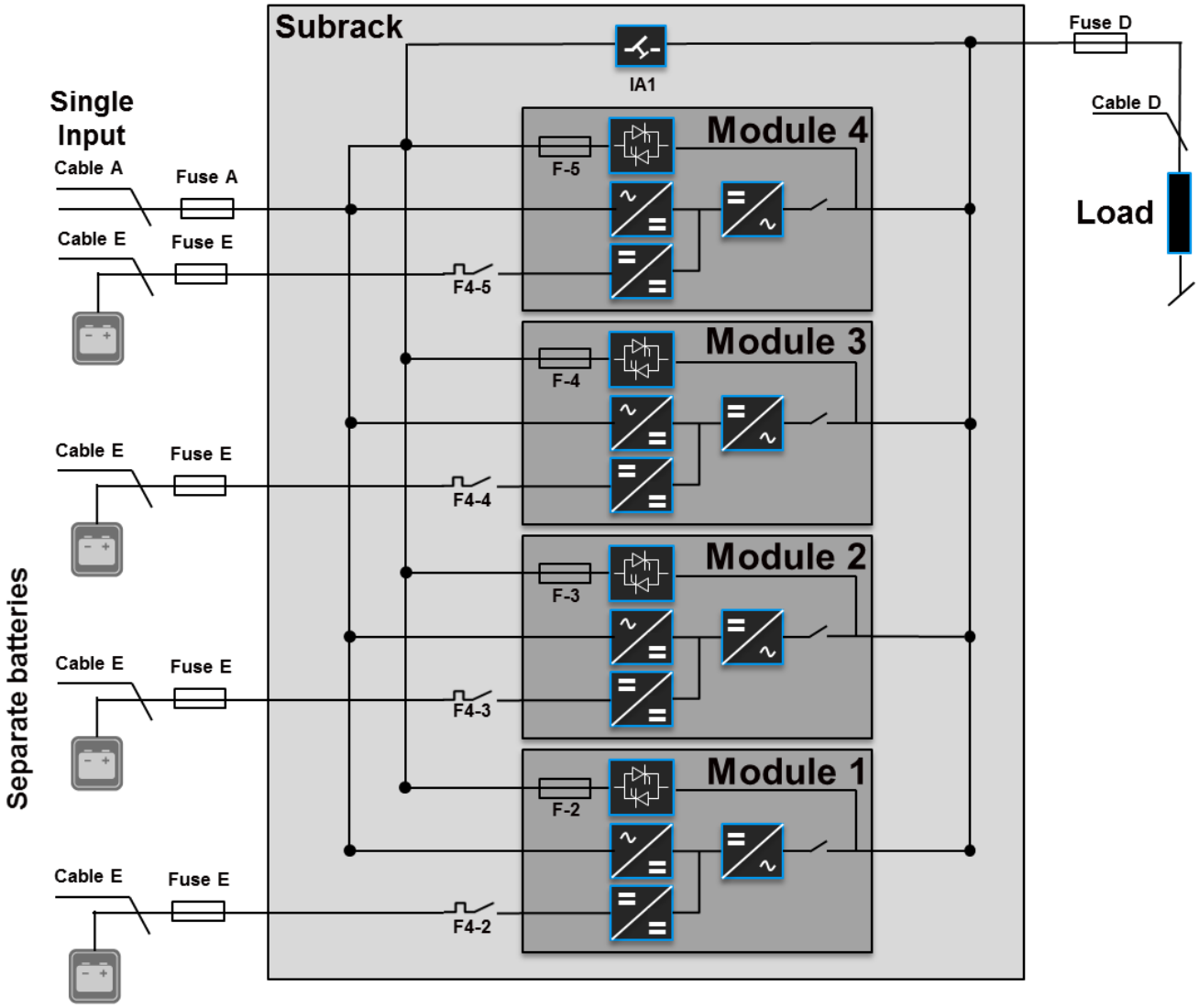

10.12.3 SINGLE FEED INPUT / Cable Sections

Enclosure type	Load in KW	Input 3x400V/230V			Output 3x400V/230V @ cosphi 1.0		Battery		
		Fuse A (Agl/CB)	Cable A (mm^2) (IEC 60950-1)	Max. Input Current with battery charging (A)	Cable D (mm^2) (IEC 60950-1)	I nom (A)	Fuse E + / N / - (Agl/CB)	Cable E (mm^2) Only for external Batteries + / N / -	
								Com. Battery	Sep. Battery
Upscale RI 10	20	3x40A	5x6	34	5x6	29 A	3x63A	n.a	3x10
Upscale RI 11	20	3x40A	5x6	34	5x6	29 A	3x63A	n.a	n.a
Upscale RI 12	20	3x40A	5x6	34	5x6	29 A	3x63A	n.a	n.a
Upscale RI 20	40	3x80A	5x16	68	5x16	58 A	3x100A *1	3x25 *1	2x(3x10)
Upscale RI 22	40	3x80A	5x16	68	5x16	58 A	3x100A *1	n.a	n.a
Upscale RI 24	40	3x80A	5x16	68	5x16	58 A	3x100A *1	n.a	n.a
Upscale RI 40	80	3x160A	5x50	136 A	5x50	116 A	3x224A*1	3x95 *1	4x(3x10)

*1 only valid for common battery use

n.a = not allowed

10.12.4 DUAL FEED INPUT

Cable Sections and Fuse Ratings recommended. Alternatively, local standards to be respected

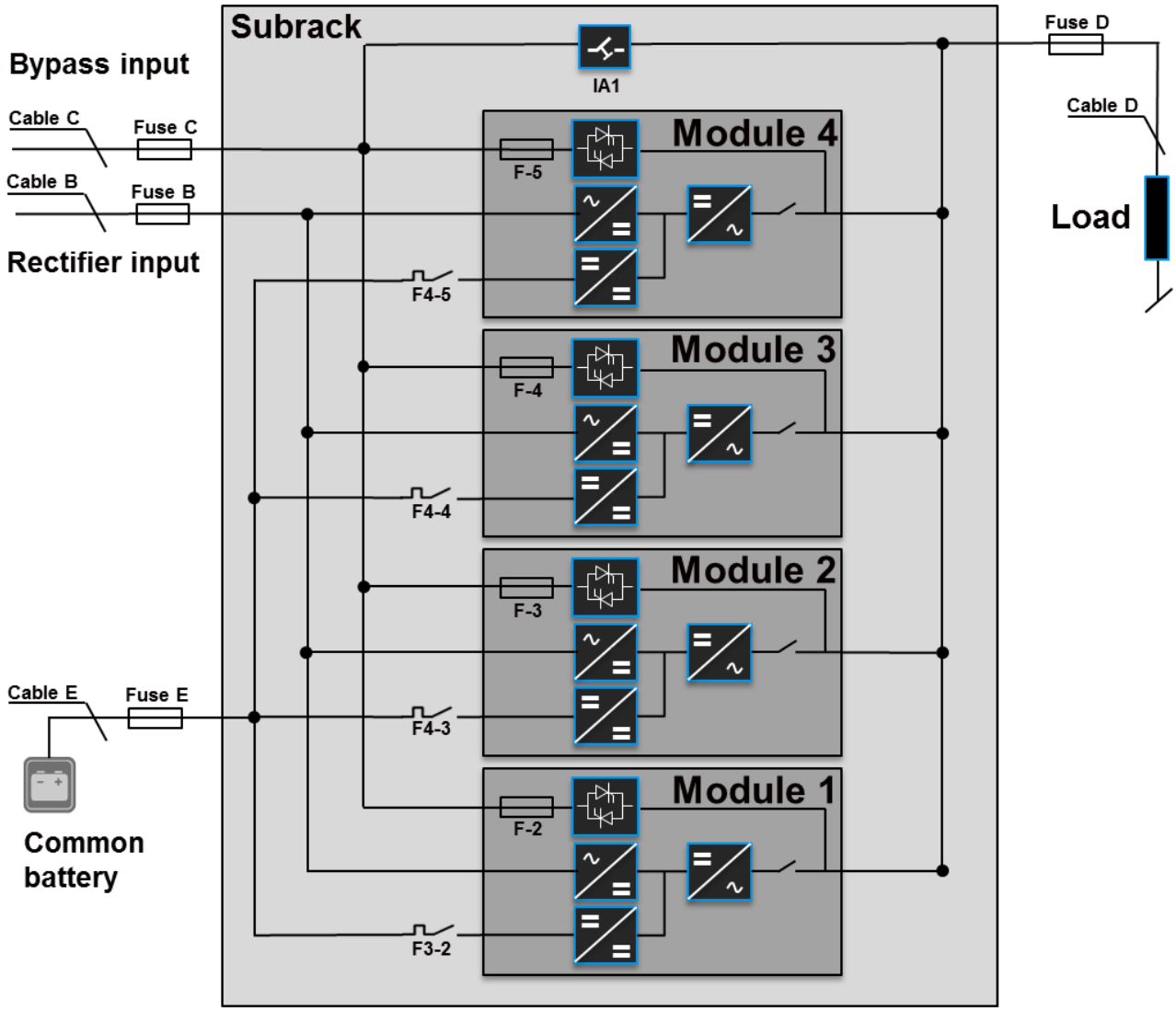

10.12.5 Dual FEED INPUT / Cable Sections

Enclosure type	Load in KW	Input 3x400V/230V			Bypass 3x400V/230V		Output 3x400V/230V @ cosphi 1.0		Battery		
		Fuse B (Agl/CB)	Cable B (mm^2) (IEC 60950-1)	Max. Input Current with battery charging (A)	Fuse C (Agl/CB)	Cable C (mm^2) (IEC 60950-1)	Cable D (mm^2) (IEC 60950-1)	I nom	Fuse E +/N/- (Agl/CB)	Cable E (mm^2) Only for external Batteries + / N / -	
										Com. Battery	Sep. Battery
Upscale RI 10	20	3x40A	5x6	34	3x40A	4x6	5x6	29 A	3x63A	n.a	3x10
Upscale RI 11	20	3x40A	5x6	34	3x40A	4x6	5x6	29 A	3x63A	n.a	n.a
Upscale RI 12	20	3x40A	5x6	34	3x40A	4x6	5x6	29 A	3x63A	n.a	n.a
Upscale RI 20	40	3x80A	5x16	68	3x80A	4x16	5x16	58 A	3x100A *1	3x25 *1	2x(3x10)
Upscale RI 22	40	3x80A	5x16	68	3x80A	4x16	5x16	58 A	3x100A *1	n.a	n.a
Upscale RI 24	40	3x80A	5x16	68	3x80A	4x16	5x16	58 A	3x100A *1	n.a	n.a
Upscale RI 40	80	3x160A	5x50	136 A	3x160A	4x50	5x50	116 A	3x224A*1	3x95 *1	4x(3x10)

*1 only valid for common battery use

n.a = not allowed